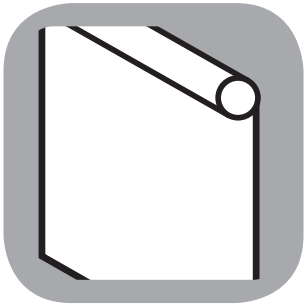

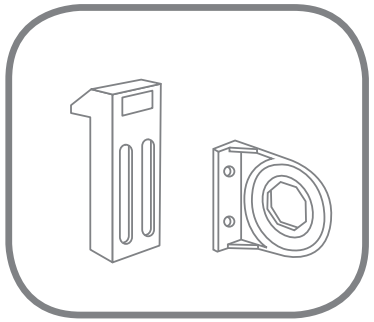

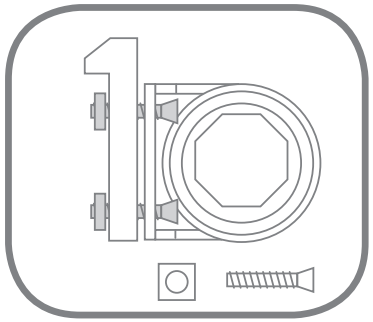

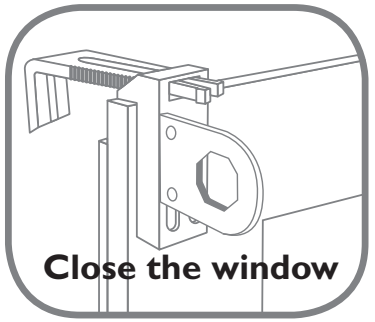

Close the window

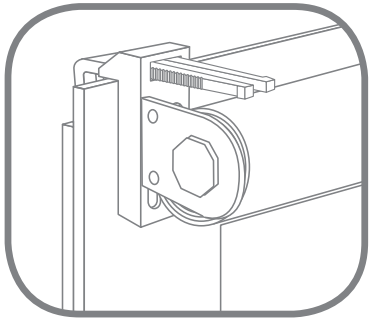

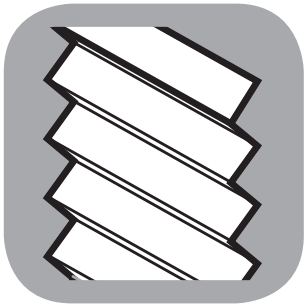

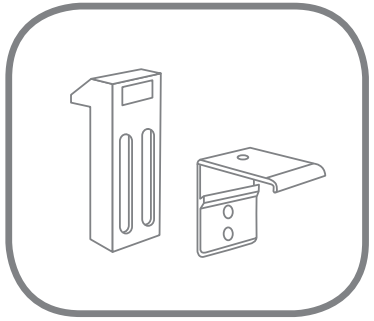

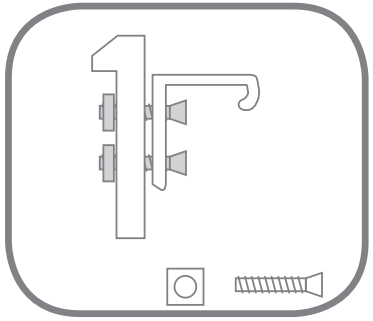

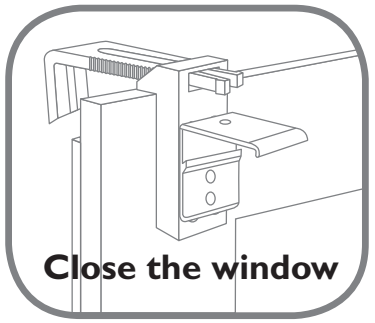

Close the window

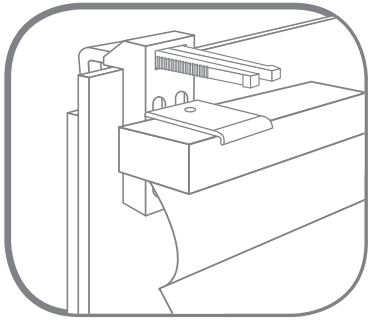

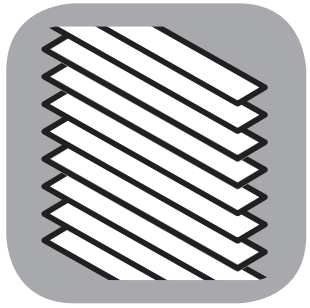

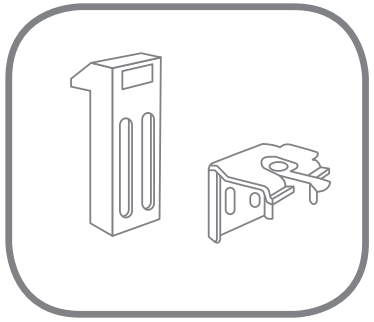

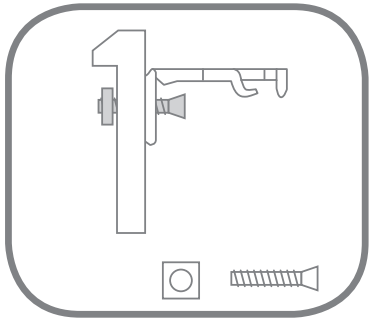

Close the window

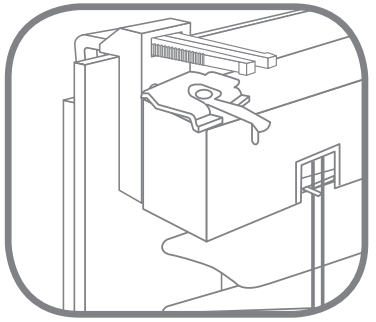

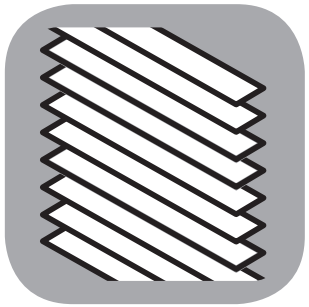

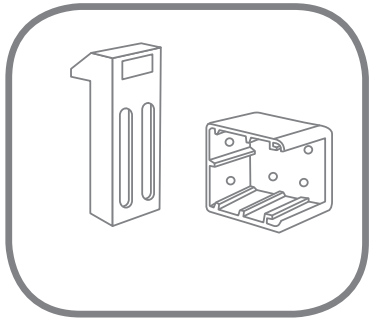

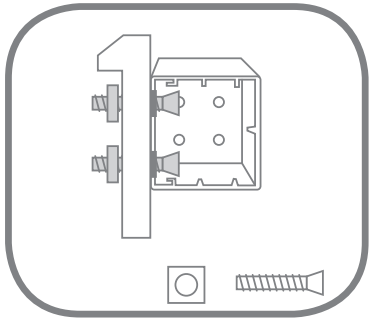

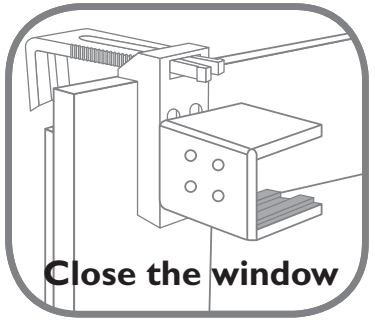

Close the window